SHOWCASE

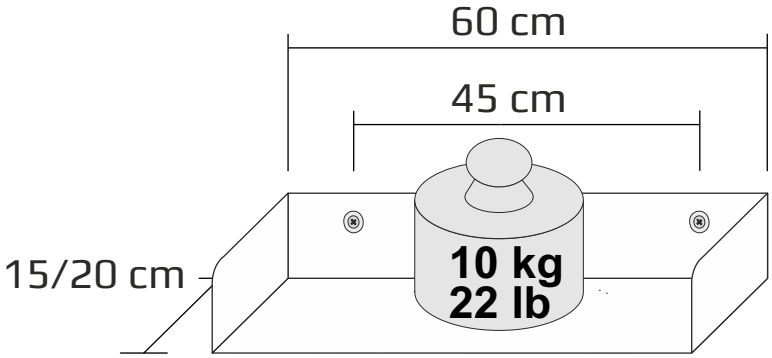
60 cm
45 cm
15/20 cm
10 kg
22 lb

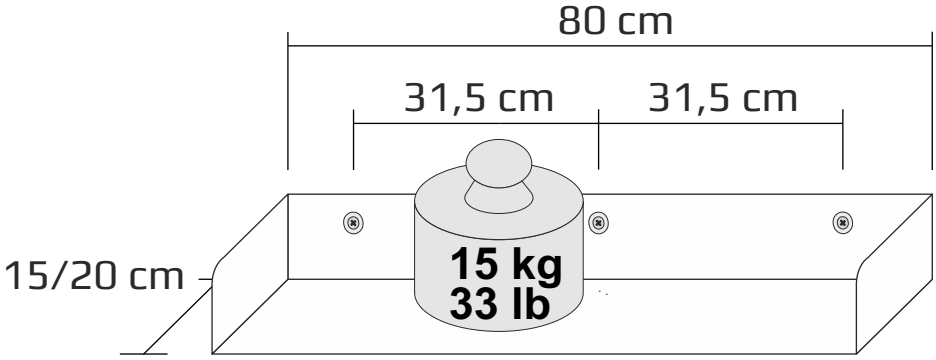
80 cm
31,5 cm
31,5 cm
15/20 cm
15 kg
33 lb

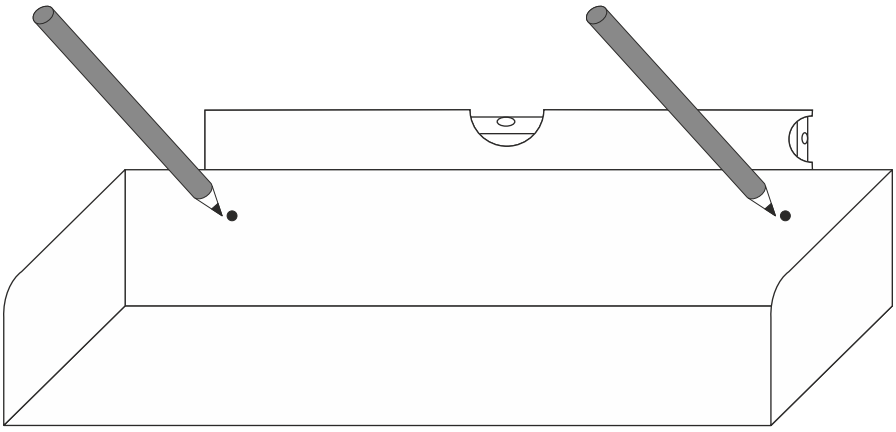

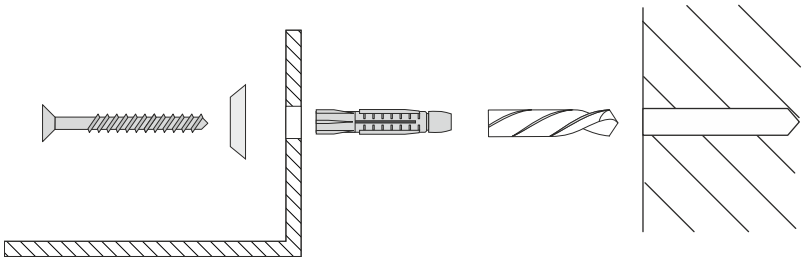

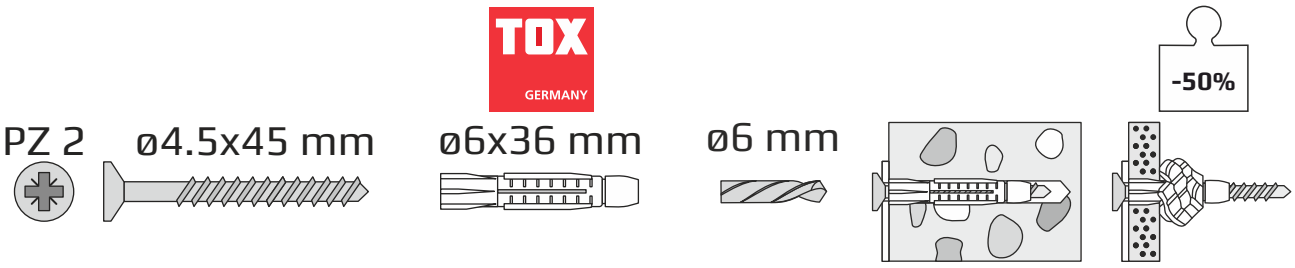
TOX
GERMANY
-50%
PZ 2
ø4.5x45 mm
ø6x36 mm
ø6 mm