LYNN

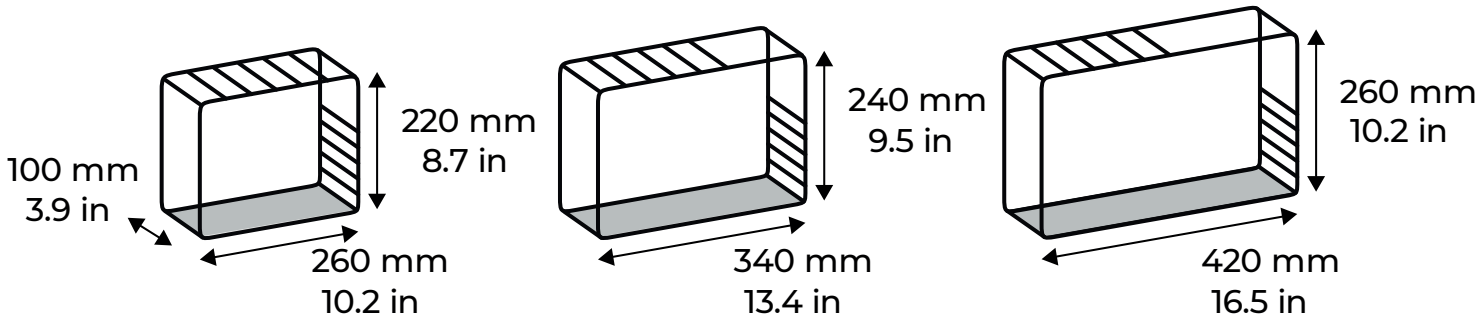
100 mm
3.9 in
220 mm
8.7 in
260 mm
10.2 in
240 mm
9.5 in
340 mm
13.4 in
260 mm
10.2 in
420 mm
16.5 in

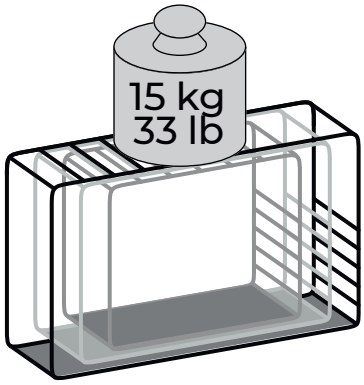
15 kg
33 lb

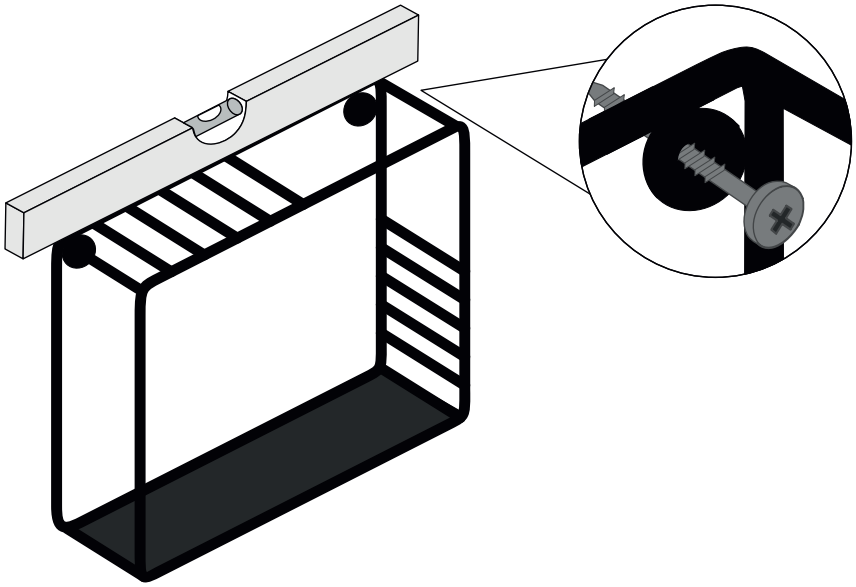

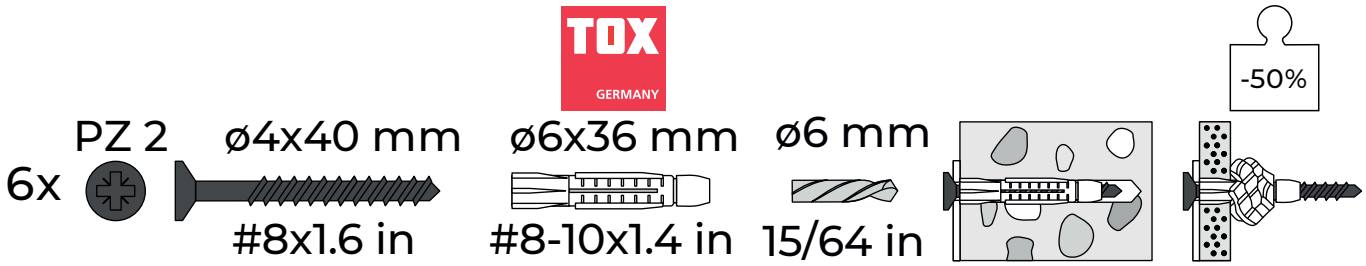
TOX
GERMANY
-50%
6x
PZ 2
ø4x40 mm
#8x1.6 in
ø6x36 mm
#8-10x1.4 in
ø6 mm
15/64 in