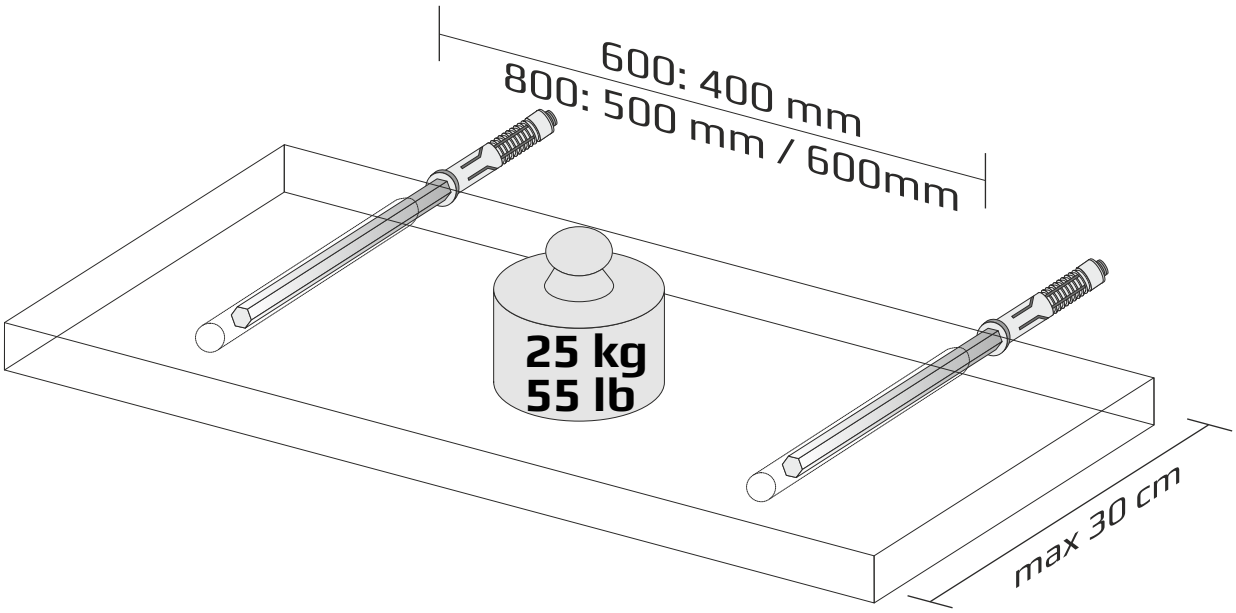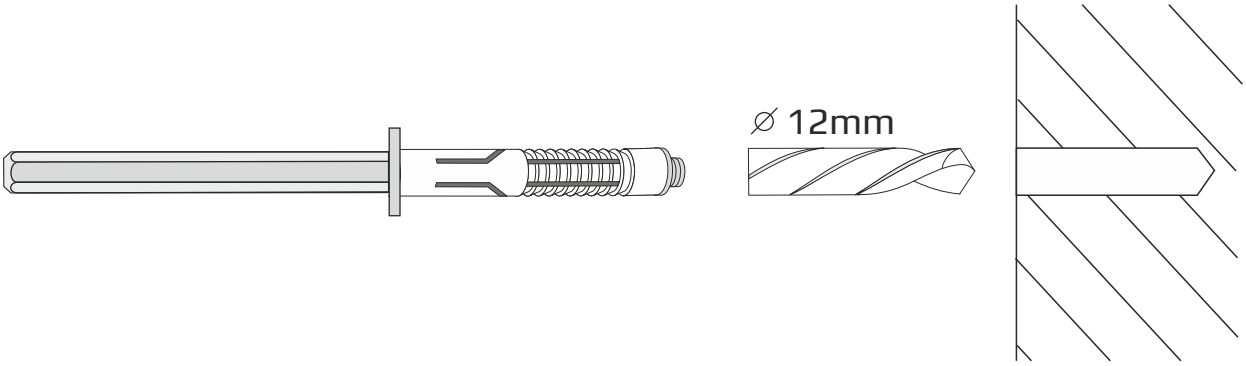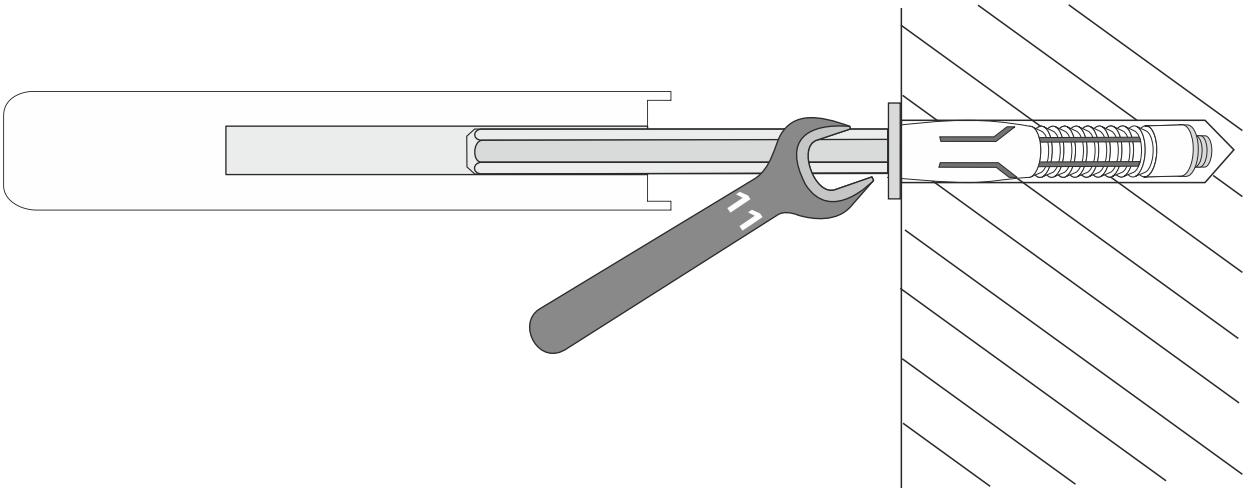# FEEL+STRONGFIX