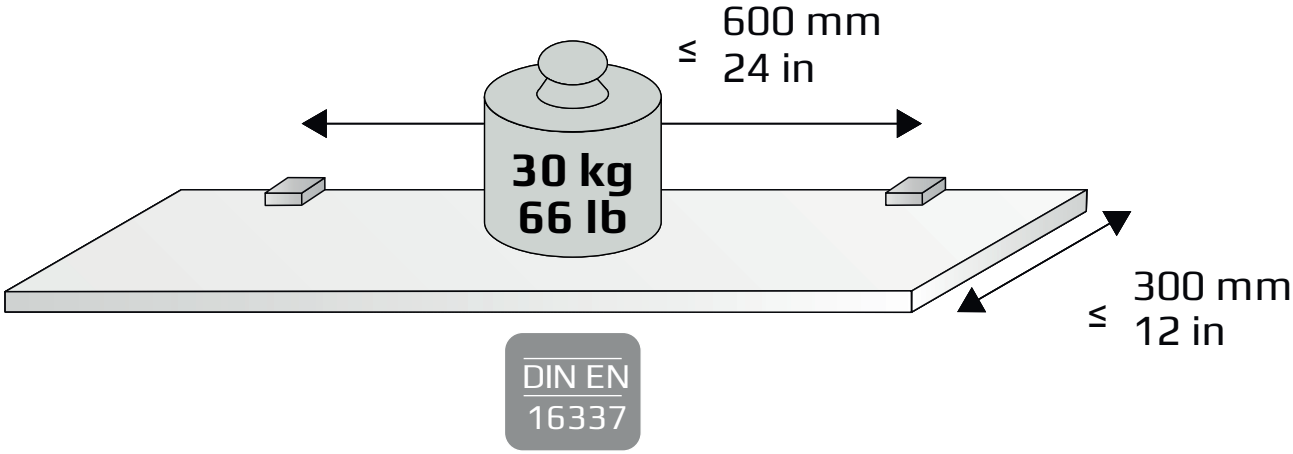
≤ 600 mm
24 in
30 kg
66 lb
≤ 300 mm
12 in
DIN EN
16337

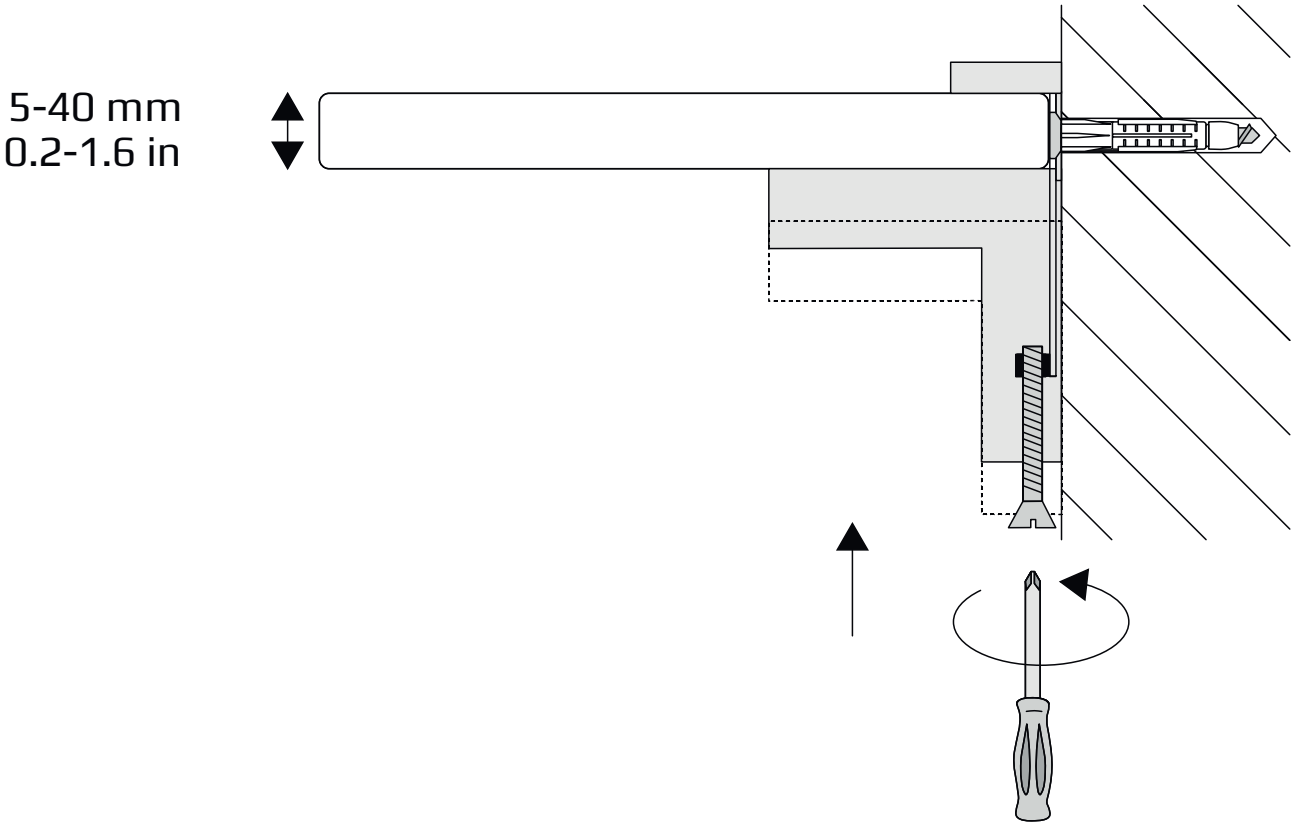
5-40 mm
0.2-1.6 in

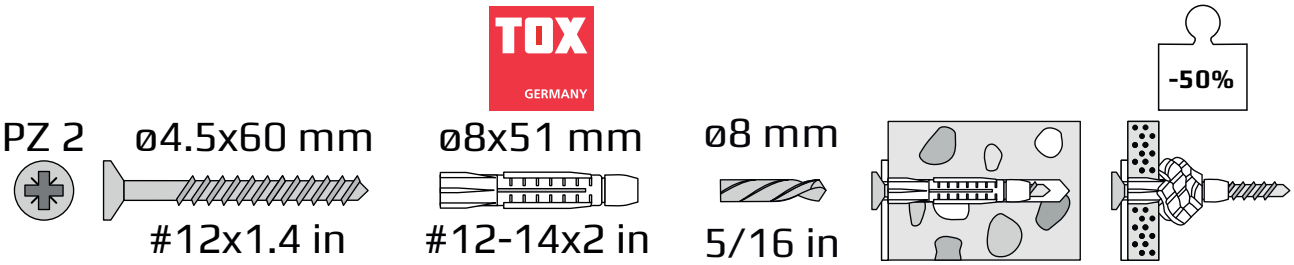
TOX
GERMANY
-50%
PZ 2
ø4.5x60 mm
#12x1.4 in
ø8x51 mm
#12-14x2 in
ø8 mm
5/16 in